3420 240A　ﾘﾔﾀｲﾔ REAR TIRE (ﾜｲﾄﾞ)

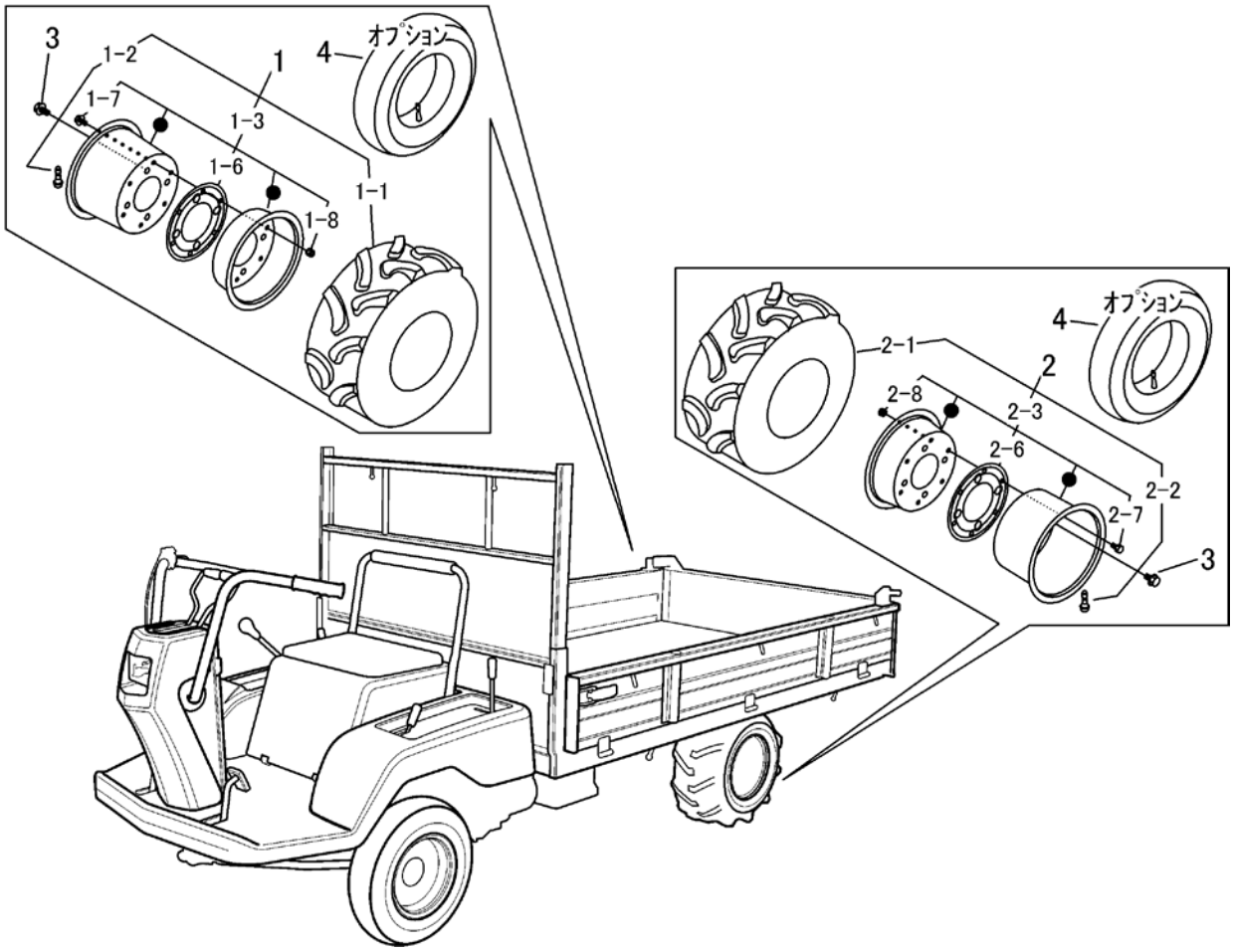

見出	部品番号	部品名称		個数	型　寸	適 用 号 機	備　考
NO.	PART NO.		PART NAME	Q'ty	DESCRIPTION	FROM ～ UP TO SERIAL NO	REMARKS
1	3420 2401 000	ﾜｲﾄﾞﾀｲﾔASSYR	TIRE	1	17*8.00-8 4PR		
1-1	3407 6002 900	ﾀｲﾔ	TIRE	1	17*8.00-8 4PR		
1-2	3714 2204 000	ﾊﾞﾙﾌﾞ	VALVE	1	TR413		
1-3	3420 2402 000	ﾎｲﾙASSY	WHEEL	1			
1-6	5347 2306 000	ﾊﾟｯｷﾝ	SEAL	1			
1-7	A110 0108 016	ﾎﾞﾙﾄ	BOLT	6	M8×16		
1-8	H301 0108 001	Sﾅｯﾄ	NUT	6	M8		
2	3420 2405 000	ﾜｲﾄﾞﾀｲﾔASSYL	TIRE	1	17*8.00-8 4PR		
2-1	3407 6002 900	ﾀｲﾔ	TIRE	1	17*8.00-8 4PR		
2-2	3714 2204 000	ﾊﾞﾙﾌﾞ	VALVE	1	TR413		
2-3	3420 2402 000	ﾎｲﾙASSY	WHEEL	1			
2-6	5347 2306 000	ﾊﾟｯｷﾝ	SEAL	1			
2-7	A110 0108 016	ﾎﾞﾙﾄ	BOLT	6	M8×16		
2-8	H301 0108 001	Sﾅｯﾄ	NUT	6	M8		
3	F114 0112 030	ｾﾑｽA	BOLT	8	M12×30		
4	3407 6004 000	ﾁｭｰﾌﾞ	TUBE	2	17*8.00-8		ｵﾌﾟｼｮﾝ