# 3430　110A　カバー　COVER　（　副変速ツキ　）

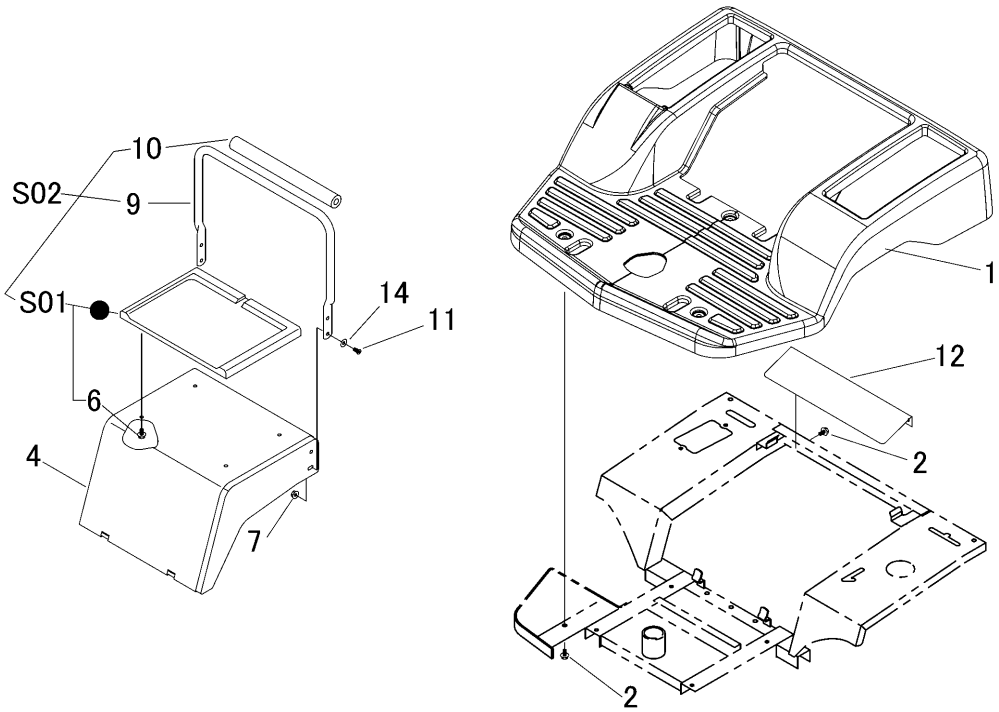


| 見出 NO. | 部品番号 PART NO. | 部品名称 | PART NAME | 個数 Q'ty | 型　寸 DESCRIPTION | 互換性 R/P | 適用号機 FROM ～ UP TO SERIAL NO. | 備　考 REMARKS |
|---|---|---|---|---|---|---|---|---|
| 1 | 3430 1101 001 | ｽﾃｯﾌﾟ | STEP | 1 | | | | |
| 2 | K110 0108 016 | Fﾎﾞﾙﾄ | BOLT | 8 | M8×16 | | | |
| | | | | | | | | |
| 4 | 3430 1105 000 | ｶﾊﾞｰ | COVER | 1 | | | | |
| | | | | | | | | |
| 6 | K710 0108 012 | Fﾎﾞﾙﾄ | BOLT | 4 | M8×12(7T) | | | |
| 7 | F301 0108 000 | Fﾅｯﾄ | NUT | 4 | M8 | | | |
| | | | | | | | | |
| 9 | 3430 1115 000 | ﾊﾟｲﾌﾟ | PIPE | 1 | | | | |
| 10 | 3430 1118 000 | ｸﾞﾘｯﾌﾟ | GRIP | 1 | | | | |
| 11 | 3430 4315 000 | ﾎﾞﾙﾄ | BOLT | 4 | | | | |
| 12 | 3430 1121 000 | ｶﾊﾞｰ | COVER | 1 | | | | |
| | | | | | | | | |
| 14 | 0350 0140 822 | PW | WASHER | 2 | 8×22×1.6 | | | |
| | | | | | | | | |
| S01 | 3430 9912 000 | ｼｰﾄｾｯﾄ | SEAT set | 1 | | | | |
| S02 | 3430 9913 000 | ﾊﾟｲﾌﾟ･ｼｰﾄｾｯﾄ | PIPE set | 1 | | | | |