3318 5001 パッケージ H.Y.D PUMP （ Hydro-Tek ）NO.5460068 -

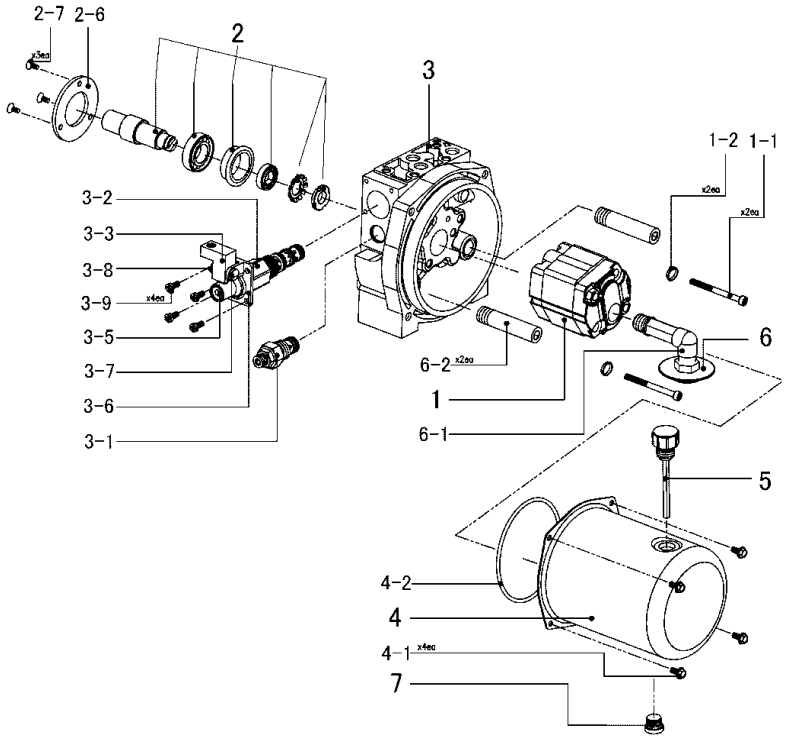

見出 NO.	部品番号 PART NO.	部品名称	PART NAME		個数 Q'ty	型　寸 DESCRIPTION	互換性 R/P	適用号機 FROM ～ UP TO SERIAL NO.	備　考 REMARKS
1	ZL402733	ﾎﾟﾝﾌﾟ	PUMP		1	402733			
1-1	ZL401232	ﾎﾞﾙﾄ	MOUNTING BOLT		1	401232			M8*90
1-2	ZL401101	ｽﾌﾟﾘﾝｸﾞﾜｯｼｬ	SPRING WASHER		1	401101			M8
2	ZL402712999	ｼｬﾌﾄAssy	SHAFT Assy		1				
2-6	ZL402713	ｶﾊﾞｰ	COVER		1	402713			
2-7	ZL402438	ﾎﾞﾙﾄ	BOLT		3	402438			M5*8
3	ZL402672	ﾌﾞﾛｯｸ	CENTER BLOCK		1	402672			
3-1	ZL402048	ﾘﾘｰﾌﾊﾞﾙﾌﾞ	RELIFE VALVE		1	402048			
3-2	ZL402050	ﾊﾞﾙﾌﾞ	VALVE		1	402050			
3-3	ZL411636	ﾚﾊﾞｰ	LEVER		1	411636			
3-5	ZL402401	ﾎﾞｽ	BOSS		1	402401			
3-6	ZL402420	ﾌﾞﾗｹｯﾄ	BRACKET		1	402420			
3-7	ZL402403	ﾋﾟﾝ	PIN		1	402403			
3-8	ZL402624	ｽﾅｯﾌﾟﾘﾝｸﾞ	SNAP RING		1	402624			
3-9	ZL402470	ﾎﾞﾙﾄ	BOLT		4	402470			M5*10
4	ZL402802	ﾀﾝｸ	TANK		1	402802			
4-1	ZL400740	ﾎﾞﾙﾄ	BOLT		4	400740			M6*12
4-2	ZL401316	Oﾘﾝｸﾞ	O-RING		1	401316			
5	ZL400710	ｴｱﾌﾞﾘｰｻﾞ	AIR BREATHER		1	400710			PF3/8
6	ZL400281	ｻｸｼｮﾝﾌｨﾙﾀｰ	SUCTION FILTER		1	400281			
6-1	ZL411772	ｻｸｼｮﾝﾊﾟｲﾌﾟ	SUCTION PIPE		1	411772			
6-2	ZL413032	ﾘﾀｰﾝﾊﾟｲﾌﾟ	RETURN PIPE		1	413032			
7	ZL400982	ﾄﾞﾚｰﾝﾌﾟﾗｸﾞ	DRAIN PLUG		1	400982			PF1/2