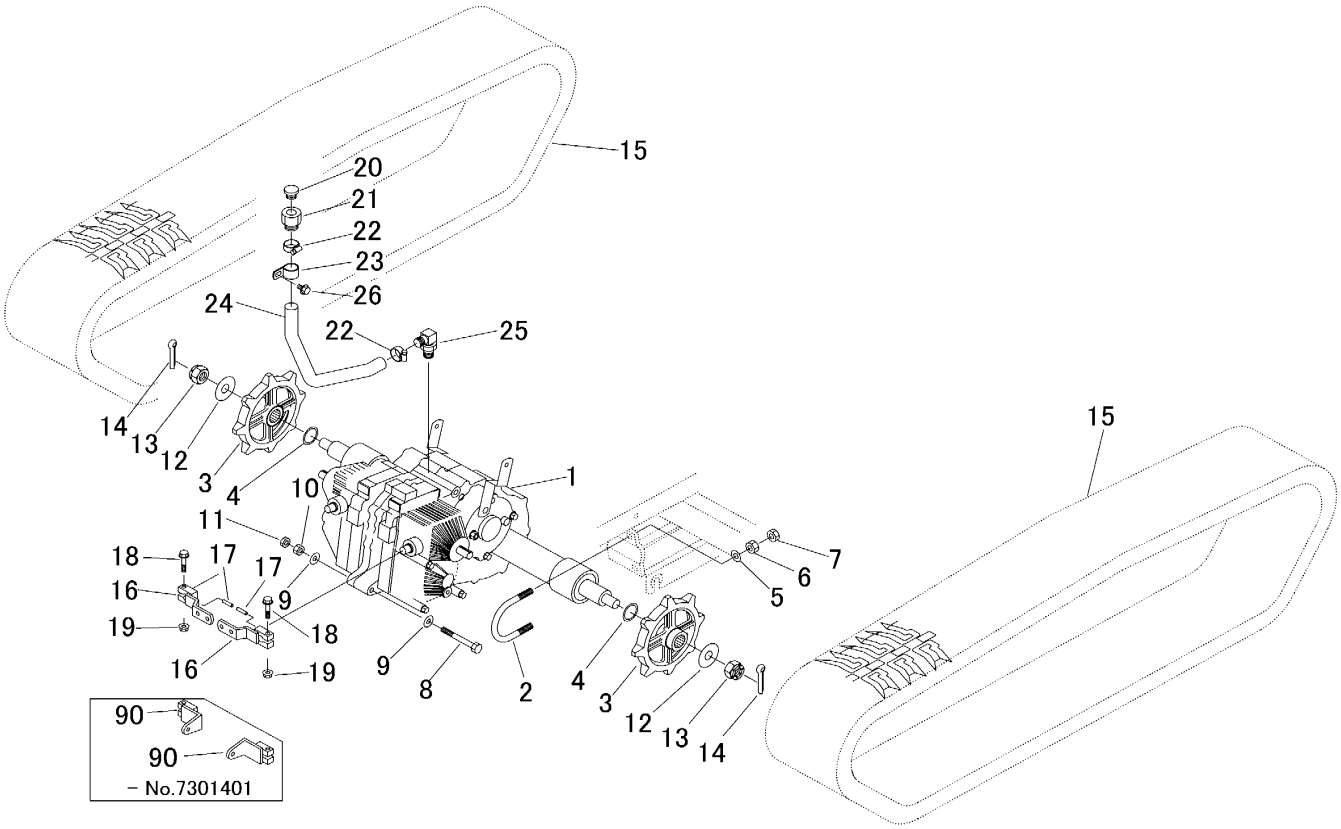

見出 NO.	部品番号 PART NO.	部品名称	PART NAME	個数 Q'ty	型　寸 DESCRIPTION	互換性 R/P	適用号機 FROM ～ UP TO SERIAL NO.	備　考 REMARKS
1	7107 000D 000	ﾐｯｼｮﾝASSY	TRANSMISSION	1	HT133D		－ NO.7301401	
1	7107 000D 001	ﾐｯｼｮﾝASSY	TRANSMISSION	1	HT133D	D	NO.7301402 －	
2	3628 2001 000	Uﾎﾞﾙﾄ	U-BOLT	2				
3	3646 2004 000	ｽﾌﾟﾛｹｯﾄ	SPROCKET	2				
4	3667 2005 000	ｼﾑ	SHIM	2				
5	0350 0151 226	PW	WASHER, PLAIN	4	12×26×2.3			
6	A301 0112 001	ﾅｯﾄ	NUT	4	M12			
7	A301 0112 003	ﾅｯﾄ	NUT	4	M12			
8	A114 0110 090	ﾎﾞﾙﾄ	BOLT	1	M10×90×26			
9	0350 0151 026	PW	WASHER, PLAIN	2	10×26×2.3			
10	A301 0110 001	ﾅｯﾄ	NUT	1	M10			
11	A301 0110 003	ﾅｯﾄ	NUT	1	M10			
12	0350 0172 055	PW	WASHER, PLAIN	2	20×55×4.5			
13	A312 0102 020	ｷｬｯｽﾙﾅｯﾄ	NUT	2	M20(P=1.5)			
14	0520 0140 040	ﾜﾘﾋﾟﾝ	PIN, SPLIT	2	4.0×40			
15	3570 2021 000	ｸﾛｰﾗ	CRAWLER	2			－ NO.7300616	BS
15	3570 2023 000	ｸﾛｰﾗ	CRAWLER	2		A	NO.7300617 －	Dongil
16	3570 2015 000	ﾘﾝｸ	LINK	2		D	NO.7301402 －	
17	0550 0006 025	ｽﾌﾟﾘﾝｸﾞﾋﾟﾝ	PIN spring	2				
18	K814 0108 040	Fﾎﾞﾙﾄ	BOLT	2	M8×40(8T)			
19	F301 0108 000	Fﾅｯﾄ	NUT	2	M8			
20	7410 1004 000	ﾁｭｳﾕｾﾝ	CAP	1	PF1/2			
21	3308 2112 000	ｱﾀﾞﾌﾟﾀA	ADAPTER	1				
22	3308 2114 000	ﾊﾞﾝﾄﾞ	BAND	2	19-28			
23	5229 6163 000	ｸﾗﾝﾌﾟ	CLAMP	1				
24	3570 2025 000	ﾎｰｽ	HOSE	1				
25	3661 6137 000	ｻﾞﾂｷｴﾙﾎﾞ	ELBOW	1				
26	K110 0108 016	Fﾎﾞﾙﾄ	BOLT	1	M8×16(4T)			
90	3570 2011 000	ﾘﾝｸ	LINK	2		D	－ NO.7301401	