# 3666 510A フゾクヒン ACCESSORY

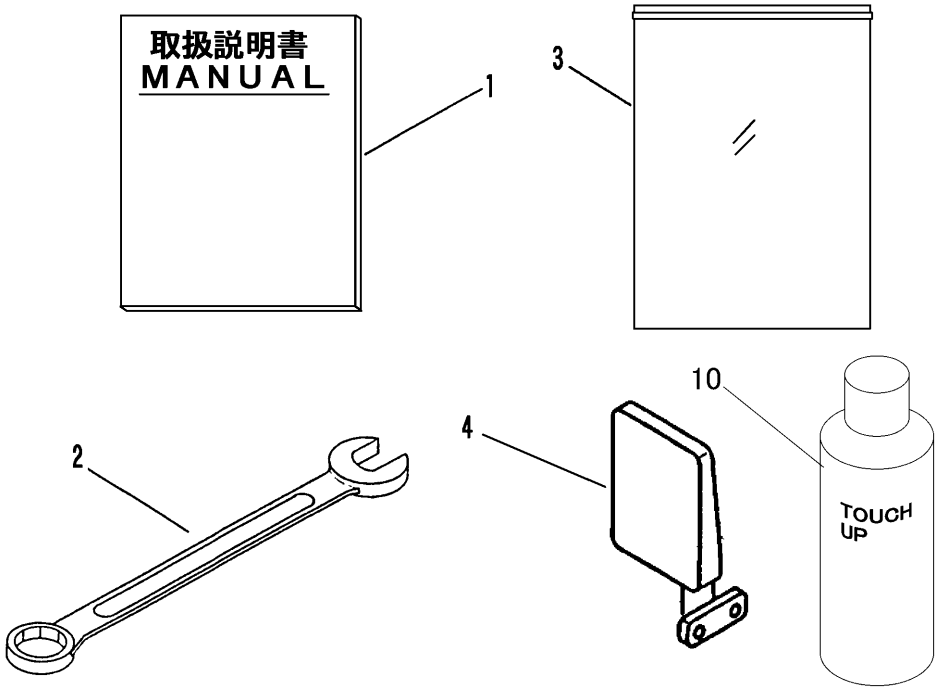


| 見出 NO. | 部品番号 PART NO. | 部品名称 | PART NAME | 個数 Q'ty | 型　寸 DESCRIPTION | 適用号機 FROM ～ UP TO SERIAL NO. | 備考 REMARKS |
|---|---|---|---|---|---|---|---|
| 1 | 3666 5101 000 | ﾄﾘｱﾂｶｲｾﾂﾒｲｼｮ | MANUAL | 1 | | | |
| 2 | 0993 0000 030 | ｽﾊﾟﾅ30 | WRENCH | 1 | | | |
| 3 | 3656 6502 000 | ﾊﾞｯｸﾞ | BAG | 2 | | | |
| 4 | 3640 3731 000 | ﾊﾞｯｸﾐﾗｰR | MIRROR | 1 | | | |
| 10 | Z9999 6015 000 | ｽﾌﾟﾚｰ | SPRAY | 1 | ｼｬﾁﾌﾞﾙｰ | ～NO.6160238 | |
| 10 | Z9999 6010 000 | ｽﾌﾟﾚｰ | SPRAY | 1 | ｷｬﾆｺﾑﾊﾟｰﾌﾞﾙ | ～NO.6160238 | |
| 10 | Z9999 6016 000 | ｽﾌﾟﾚｰ | SPRAY | 1 | FA-GAﾚｯﾄﾞ | | |
| 10 | Z9999 6017 000 | ｽﾌﾟﾚｰ | SPRAY | 1 | ﾌﾞﾗｯｸｸﾞﾚｰ | | |
| 10 | Z9999 6009 000 | ｽﾌﾟﾚｰ | SPRAY | 1 | ｷｬﾆｺﾑﾌﾞﾙｰ | NO.6160239～ | |
| 10 | Z9999 6018 000 | ｽﾌﾟﾚｰ | SPRAY | 1 | ﾅﾁｭﾗﾙｲｴﾛｰ | NO.6160239～ | |