3667　000B　エンジンクミタテ　ENGINE　EQUIPMENT

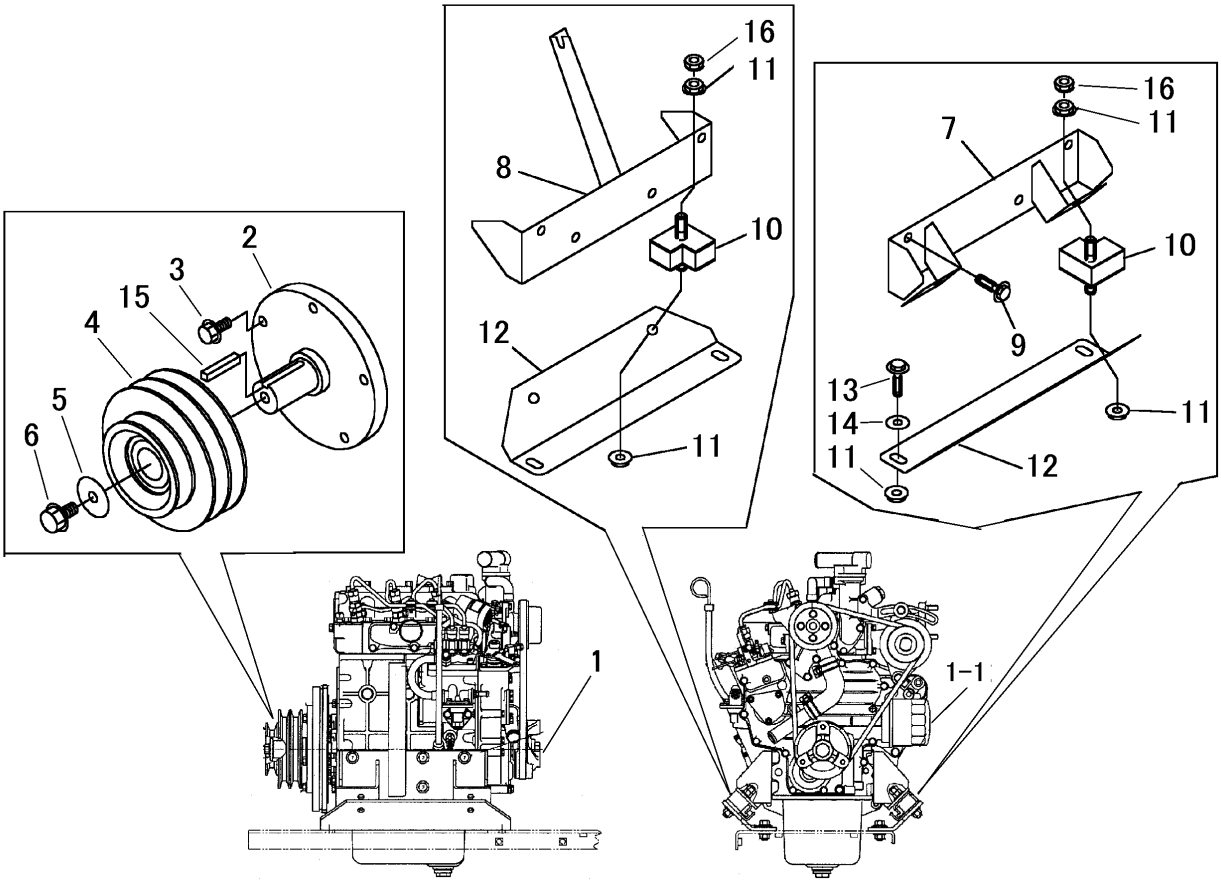

見出 NO.	部品番号 PART NO.	部品名称	PART NAME	個数 Q'ty	型　寸 DESCRIPTION	適用号機 FROM ～ UP TO SERIAL NO	備　考 REMARKS
1	3667 0051 000	ｴﾝｼﾞﾝ	ENGINE	1	D722-EKB-CHI-1		1-1を含む
1-1	K158 5332 433	ｵｲﾙﾌｨﾙﾀ	FILTER	1	15853-32433		
2	3667 0061 000	ｼｬﾌﾄ	SHAFT	1			
3	K710 0108 020	Fﾎﾞﾙﾄ	BOLT	5	M8×20 (7T)		
4	3667 0065 000	ﾌﾟｰﾘ	PULLEY	1			
5	3651 0011 000	PW	WASHER,PLAIN	1			
6	K710 0110 020	Fﾎﾞﾙﾄ	BOLT	1	M10×20 (7T)		
7	3667 0071 000	ﾌﾞﾗｹｯﾄ	BRACKET	1			
8	3667 0075 000	ﾌﾞﾗｹｯﾄ	BRACKET	1			
9	K712 0110 020	Fﾎﾞﾙﾄ	BOLT	8	M10×20 (細目)		
10	3632 0155 000	ﾎﾞｳｼﾝｺﾞﾑ	MOUNT,RUBBER	4	YD6035F		
11	F301 0110 000	Fﾅｯﾄ	NUT	12	M10		
12	3667 0082 000	ﾌﾟﾚｰﾄ	PLATE	2			
13	K710 0110 025	Fﾎﾞﾙﾄ	BOLT	4	M10×25 (7T)		
14	0350 0151 026	PW	WASHER,PLAIN	4	10×26×2.3		
15	0571 0007 040	ｷｰ	KEY	1	7×40		
16	A301 0110 003	ﾅｯﾄ	NUT	4	M10(3種)		