List of Fluids and Lubricants

⚠CAUTION!

- **Follow the maintenance schedule to lubricate or grease the machine. Lack of lubrication can result in rust, excessive wear or seizure.**

List of Fluids and Lubricants

Item	Schedule	Grade	Cap.
Fuel	As needed.	Diesel Fuel	15L
Engine Oil	Fill Inspect daily. Fill as needed. Change Initially - After 50 hours of use. Every 100 hours afterwards.	Diesel Engine Oil API rating: CF SAE rating: 10W-30	3.8L
HST Fluid (also used as hydraulic fluid)	Change Every 500 hours afterwards.	Wear resistant hydraulic fluid, VG32	20L
Engine Coolant	Check Everyday Fill as needed Change every 2 years	Long Life Coolant (LLC) and pure water Mixture (50% dilution)	3.1L
Battery Electrolyte	Inspect every 50 hours. Fill as needed.	Distilled Water	-
Transmission Oil	Change Initially - After 50 hours of use. Every 100 hours afterwards.	Gear Oil API glade: GL-4 or 5 SAE index: 80	2.0L
Oiling Points	Once every 6 months. * Not necessary for the first 6 months after purchase.	Gear Oil API glade: GL-4 or 5 SAE index: 80	-
Greasing Points	Once every 6 months. * Not necessary for the first 6 months after purchase.	Chassis Grease	-

Greasing

NOTE

- **When using a manual grease pump, push handle five to six times. When handle becomes heavy, stop pushing.**
- **When using a pneumatic grease pump, charge for two to three seconds.**

	Location	Schedule	No. of Points	Grade
1	Parking Brake Pedal Link	Every 6 Months	1	Chassis Grease
2	Clutch Lever Pivot	Every 6 Months	2	Chassis Grease
3	Hydraulic Cylinder Pivot, Turret Bearing	Every 6 Months	7	Chassis Grease
4	Roller Swing Pivot	Every 6 Months	2	Chassis Grease
5	Roller Axle	Every 6 Months	10	Chassis Grease
6	Upper Roller Axle	Every 6 Months	2	Chassis Grease
7	Idler Axle	Every 6 Months	2	Chassis Grease
8	Vessel Pivot	Every 6 Months	1	Chassis Grease
①	Throttle Lever Pivot	Every 6 Months	1	Gear Oil

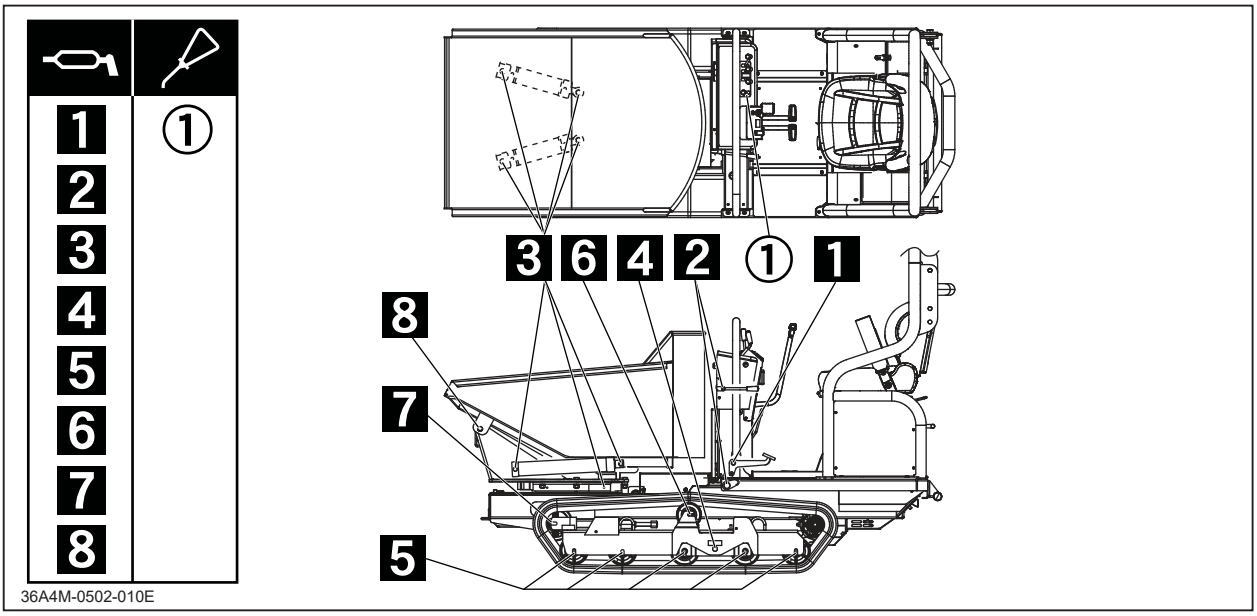

To grease the roler axle,

1. Remove the cap nut.
2. Install the grease nipple (included in the tool bag) onto the axle nut securely.
3. Grease the axle with grease pump.
4. Remove the grease nipple and install the cap nut.