5309　220A　ゼンリンクミタテ　FRONT　TIRE　EQUIPMENT

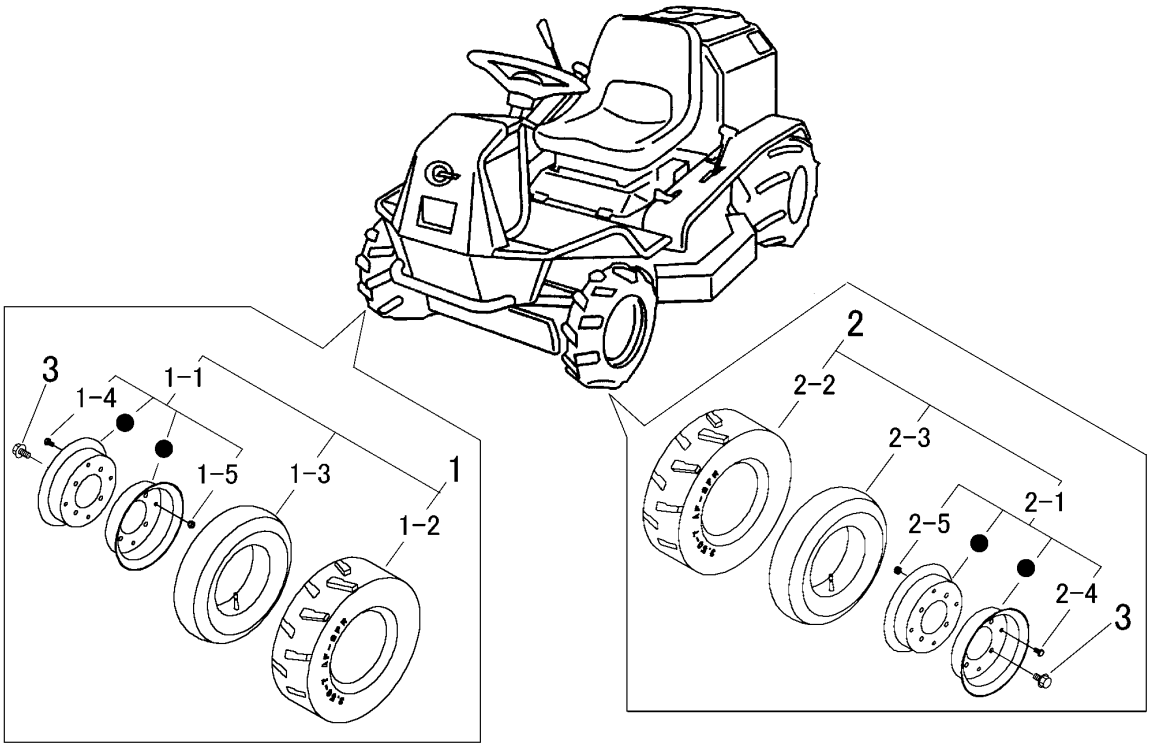

見出 NO.	部品番号 PART NO.	部品名称	PART NAME	個数 Q'ty	型　寸 DESCRIPTION	適用号機 FROM ～ UP TO SERIAL NO.	備　考 REMARKS
1	5313 2201 000	ﾀｲﾔAssyR	TIRE	1	3.50-7		
1-1	5313 2202 000	ﾘﾑAssy	RIM ASSY	1			
1-2	5304 2204 000	ﾀｲﾔ	TIRE	1	3.50-7 AF5 2PR		
1-3	5304 2205 000	ﾁｭｰﾌﾞ	TUBE	1	3.50/4.00-7		
1-4	A110 0108 016	ﾎﾞﾙﾄ	BOLT	4	M8×16		
1-5	H301 0108 001	Sﾅｯﾄ	NUT	4	M8		
2	5313 2205 000	ﾀｲﾔAssyL	TIRE	1	3.50-7		
2-1	5313 2202 000	ﾘﾑAssy	RIM ASSY	1			
2-2	5304 2204 000	ﾀｲﾔ	TIRE	1	3.50-7 AF5 2PR		
2-3	5304 2205 000	ﾁｭｰﾌﾞ	TUBE	1	3.50/4.00-7		
2-4	A110 0108 016	ﾎﾞﾙﾄ	BOLT	4	M8×16		
2-5	H301 0108 001	Sﾅｯﾄ	NUT	4	M8		
3	K710 0110 020	Fﾎﾞﾙﾄ	BOLT	8	M10×20(7T)		