5318 200A　ﾐｯｼｮﾝ TRANSMISSION

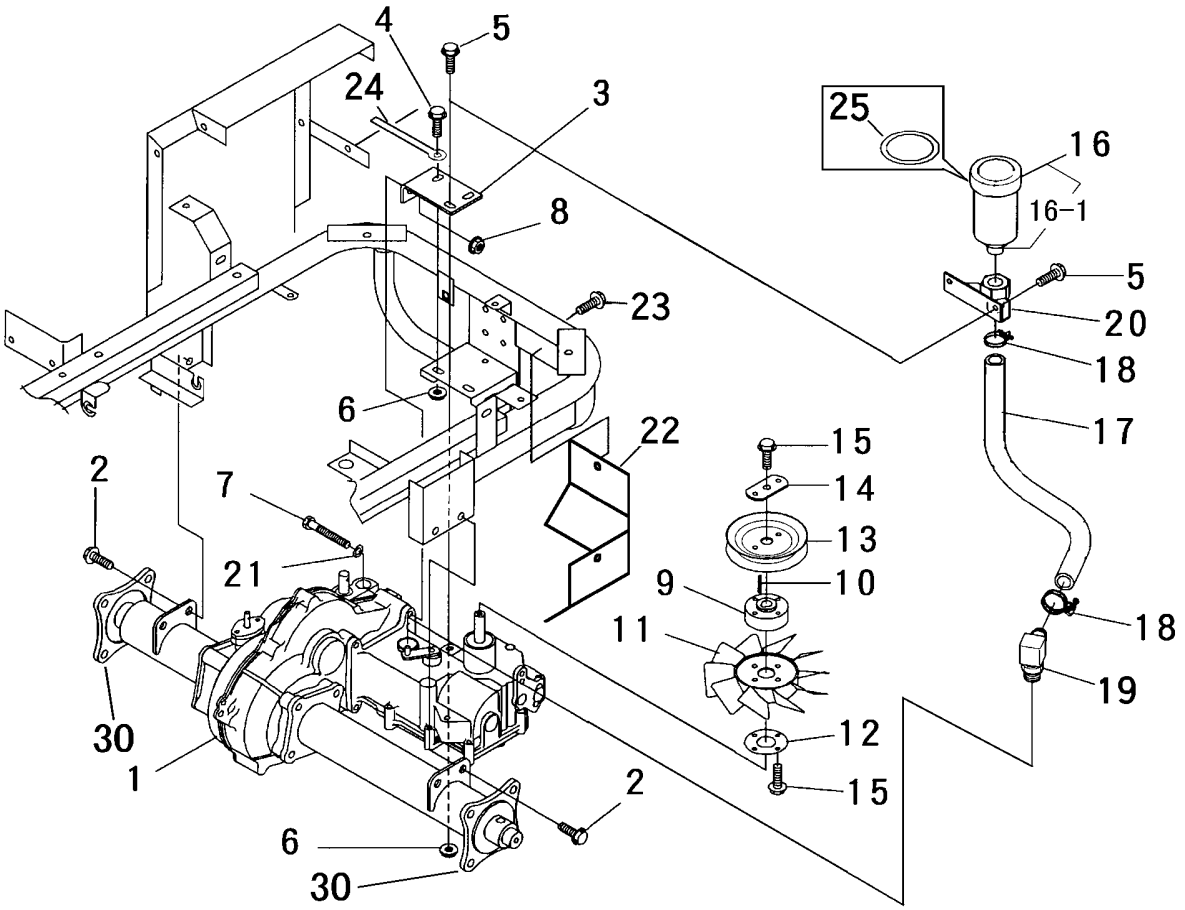

見出 NO.	部品番号 PART NO.	部品名称	PART NAME	個数 Q'ty	型　寸 DESCRIPTION	互換性 R/P	適用号機 FROM ～ UP TO SERIAL NO.	備　考 REMARKS
1	7206 000C 000	ﾐｯｼｮﾝASSY	TRANSMISSIC	1	HT051C		～NO.9300174	
1	7206 000C 001	ﾐｯｼｮﾝASSY	TRANSMISSIC	1	HT051C	D	NO.9300175～	
2	K710 0110 020	Fﾎﾞﾙﾄ	BOLT	4	M10×20(7T)			
3	5306 2004 000	ﾌﾟﾚｰﾄ	PLATE	1				
4	K710 0108 020	Fﾎﾞﾙﾄ	BOLT	2	M8×20(7T)			
5	K814 0108 050	Fﾎﾞﾙﾄ	BOLT	1	M8×50(8T)			
6	F301 0108 000	Fﾅｯﾄ	NUT	3	M8			
7	A114 0110 100	ﾎﾞﾙﾄ	BOLT	1	M10×100×26			
8	F301 0110 000	Fﾅｯﾄ	NUT	1	M10			
9	5306 2005 000	ﾎﾞｽ	BOSS	1				
10	0572 0005 028	ｷｰ	KEY	1	5×28			
11	7308 1113 000	ｸｰﾘﾝｸﾞﾌｧﾝ	FAN	1				
12	5304 2005 000	ﾏﾙｻﾞ	WASHER	1				
13	5304 2007 000	ﾌﾟｰﾘ	PULLEY	1				
14	5304 2008 000	ﾌﾟﾚｰﾄ	PLATE	1				
15	K700 0106 014	Fﾎﾞﾙﾄ	BOLT	9	M6×14(7T)			
16	5306 2012 000	ﾀﾝｸ	TANK	1				
16-1	5306 2012 100	ｵｰﾘﾝｸﾞ	RING	1				
17	5306 2013 001	ﾎｰｽ	HOSE	1				
18	3640 6009 000	ﾊﾞﾝﾄﾞ	BAND	2				
19	5306 2015 000	ｱﾀﾞﾌﾟﾀ	ADAPTER	1				
20	5306 2017 000	ﾌﾞﾗｹｯﾄ	BRACKET	1				
21	0350 0141 022	PW	WASHER	1	10×22×1.6			
22	5306 2018 000	ｶﾊﾞｰ	COVER	1				
23	K110 0108 016	Fﾎﾞﾙﾄ	BOLT	2	M8×16(4T)			
24	0050 2108 083	ｸﾗﾝﾌﾟ	CLAMP	1	L80(D形)			
25	5309 2011 000	ﾊﾟｯｷﾝ	PACKING	1				
30	7206 2408 000	ﾊﾌﾞ	HUB	2				