# 5319 030A　ﾀﾝｸ　TANK

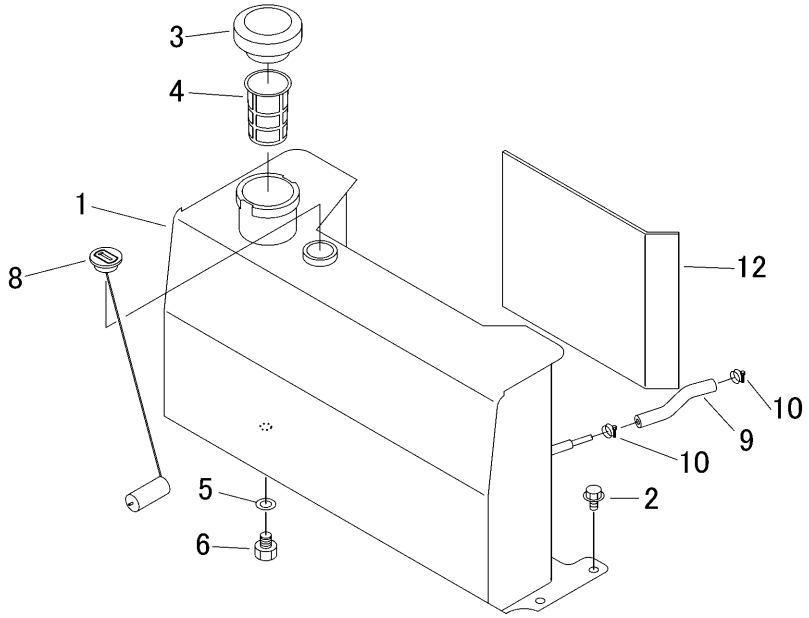


| 見出<br>NO. | 部品番号<br>PART NO. | 部品名称 | PART NAME | 個数<br>Q'ty | 型　寸<br>DESCRIPTION | 互換性<br>R/P | 適用号機<br>FROM ～ UP TO SERIAL NO. | 備　考<br>REMARKS |
|---|---|---|---|---|---|---|---|---|
| 1 | 5319 0301 000 | ﾀﾝｸ | TANK | 1 | | | | |
| 2 | K110 0108 016 | Fﾎﾞﾙﾄ | BOLT | 4 | M8×16(4T) | | | |
| 3 | 5310 0341 000 | ｷｬｯﾌﾟ | CAP | 1 | | | | |
| 4 | 5310 0343 000 | ﾌｨﾙﾀｰ | FILTER | 1 | | | | |
| 5 | 0833 0001 200 | ｼｰﾙﾜｯｼｬ | WASHER | 1 | M12用 | | | |
| 6 | 7305 1011 000 | ﾌﾟﾗｸﾞ | PLUG | 1 | M12P=1.25 | | | |
| | | | | | | | | |
| 8 | 5319 0312 000 | ﾌｭｰｴﾙｹﾞｰｼﾞ | FUEL GAUGE | 1 | | | | |
| 9 | 5319 0313 000 | ﾎｰｽ | HOSE | 1 | | | | |
| 10 | 0050 1100 130 | ﾎｰｽﾊﾞﾝﾄﾞ | BAND | 2 | | | | |
| | | | | | | | | |
| 12 | 5310 0355 000 | ｲﾝｼｭﾚｰﾀ | INSULATOR | 1 | | | | |