# 3679 330A　ｼｰﾄ SEAT

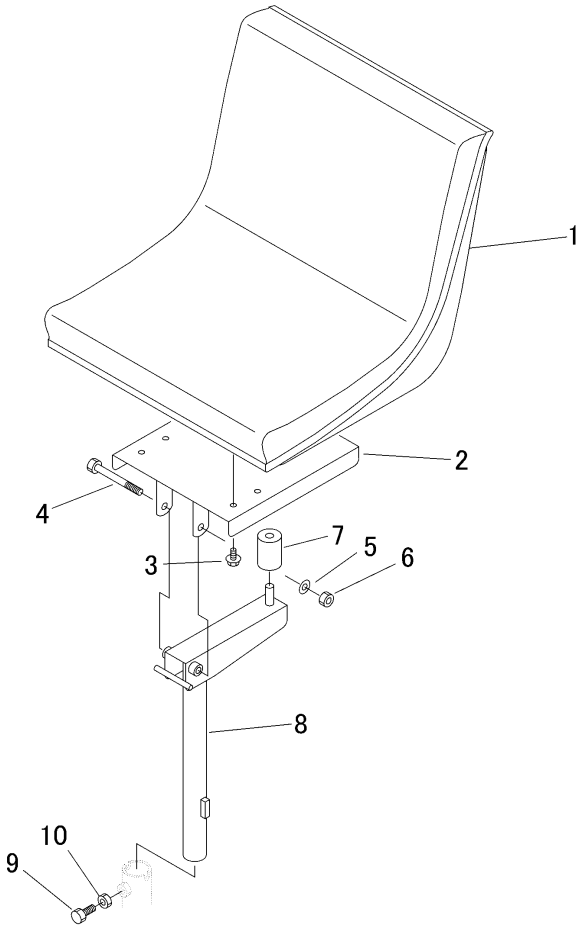


| 見出 | 部品番号 | 部品名称 | | 個数 | 型　寸 | 適 用 号 機 | 備　考 |
|---|---|---|---|---|---|---|---|
| NO. | PART NO. | | PART NAME | Q'ty | DESCRIPTION | FROM ～ UP TO SERIAL NO. | REMARKS |
| 1 | 3712 3501 000 | ｼｰﾄ Assy | SEAT | 1 | | | |
| 2 | 3679 3303 000 | ﾌﾞﾗｹｯﾄ | BRACKET | 1 | | | |
| 3 | K110 0108 016 | Fﾎﾞﾙﾄ | BOLT | 4 | M8×16(4T) | | |
| 4 | A114 0110 090 | ﾎﾞﾙﾄ | BOLT | 1 | M10×90×26 | | |
| 5 | 0350 0141 022 | PW | WASHER | 1 | 10×22×1.6 | | |
| 6 | A351 0110 002 | Uﾅｯﾄ | NUT | 1 | M10 | | |
| 7 | 3611 3403 000 | ﾎﾞｳｼﾝｺﾞﾑ | RUBBER | 1 | | | |
| 8 | 3679 3311 000 | ﾌﾞﾗｹｯﾄ | BRACKET | 1 | | | |
| 9 | A110 0110 025 | ﾎﾞﾙﾄ | BOLT | 1 | M10×25 | | |
| 10 | A301 0110 003 | ﾅｯﾄ | NUT | 1 | M10(3種) | | |